TechData

Specifications

Reserve Collection

8” Rainhead with
Arched Shower Arm

78.10.520

FEATURES:

- All brass construction
- Available in all finishes. Warranty varies according to finish selection.
- Certified to meet and exceed the following codes and standards:
  ASME A112.18.1-2005/CSAB125.1-2005

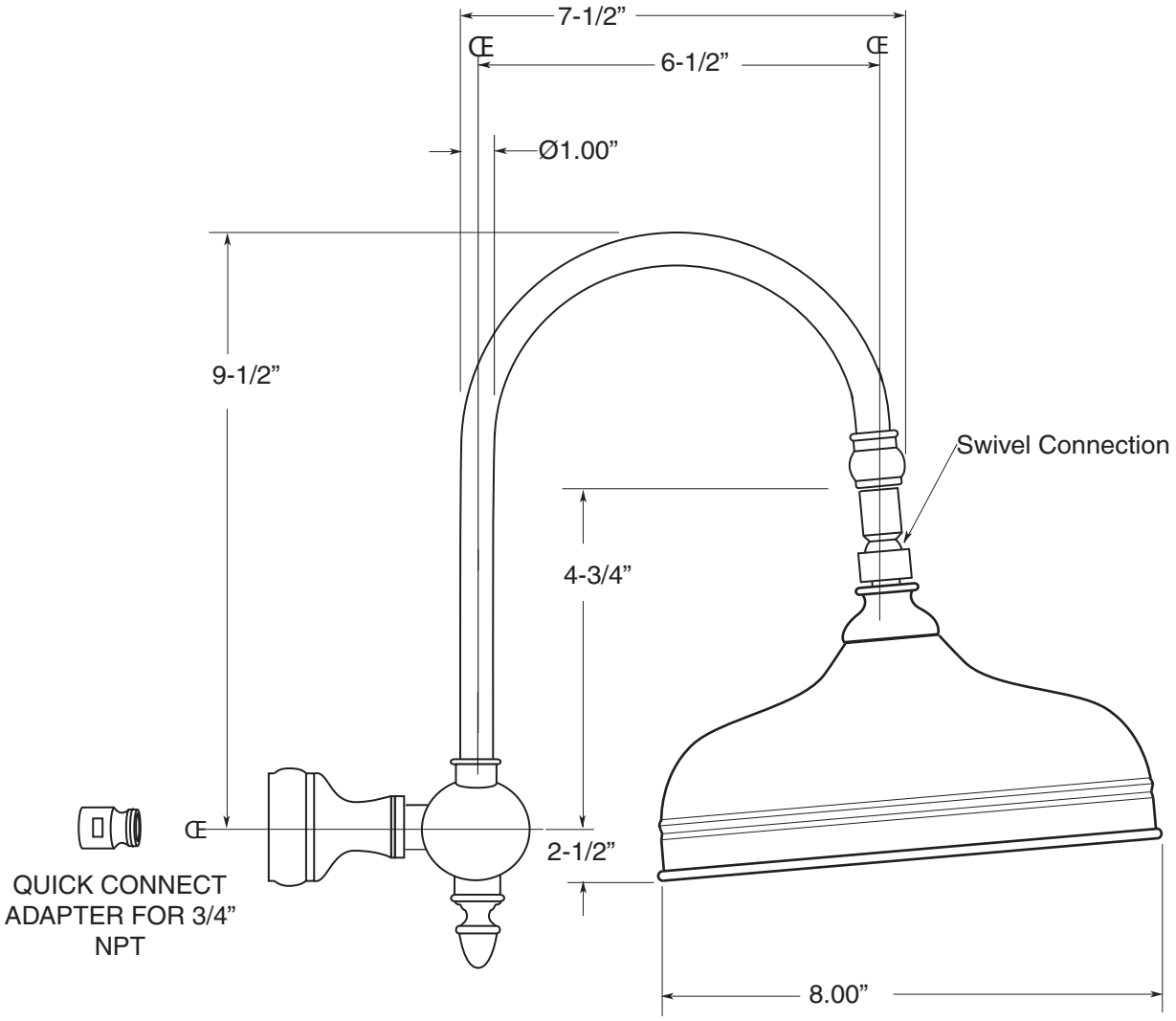

Note: Measurements are subject to change or cancellation. No responsibility is assumed for use of superseded or voided pages.