HAMBURG COLLECTION

TOWEL RING

440460

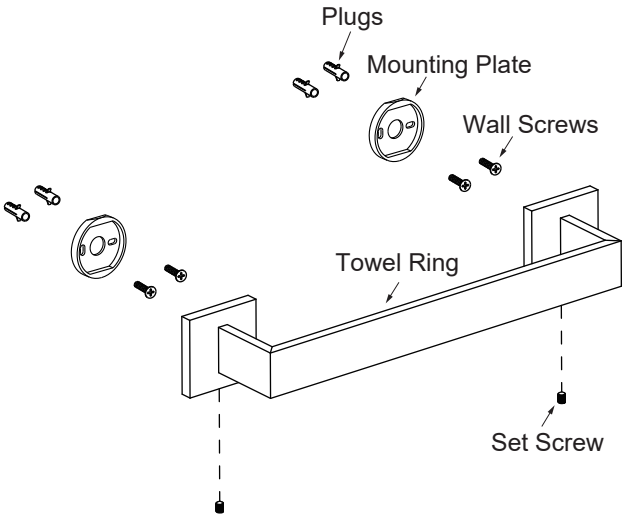

Tools required for installation

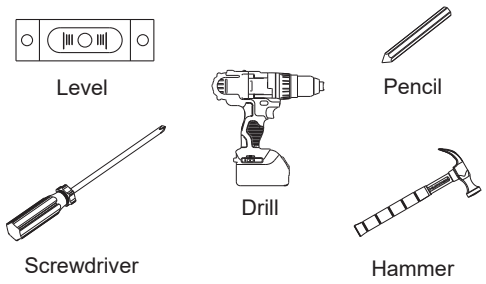

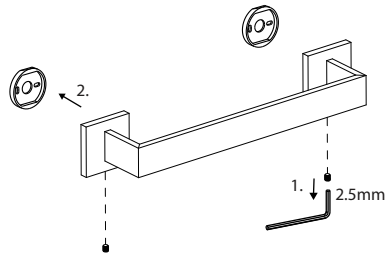

Step 1

Loosen the set screw on the accessory and remove the backing plates. Position the accessory against the wall and mark outline with pencil.

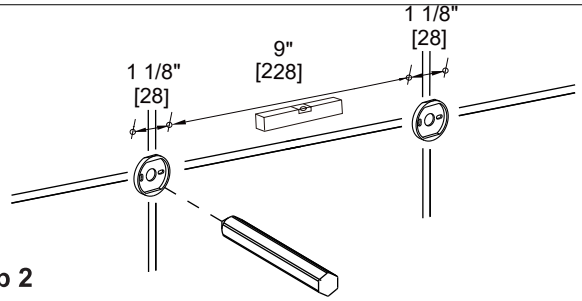

Step 2

Position the backing plates flat side down on the wall and mark holes with pencil.

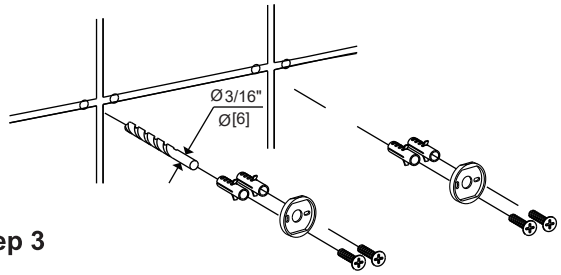

Step 3

Predrill 3/16” holes on the wall to fit wall plugs. Insert wall plugs into the wall. Position backing plates flat side down over the plugs and install screws.

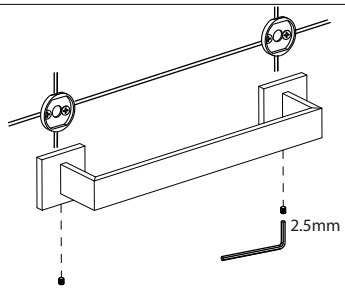

Step 4

Slide the accessory onto the backing plates and tighten the set screws using Allen key provided.