hansgrohe

Metropol Classic
Widespread Faucet 110 with Lever Handles and Pop-Up Drain, 1.2 GPM
Finishes : **polished nickel** Part no. : **31330831**

Description

Features

- Spray modes: Aerated spray
- Flow: 1.2 GPM (4.5 L/Min)
- 90° ceramic valves
- Includes pop-up drain

Item details

List Price	$ 932.00

Technology

Eco Right
Comfort Zone
Quick Clean

Compliance

ADA
UPC

Product image
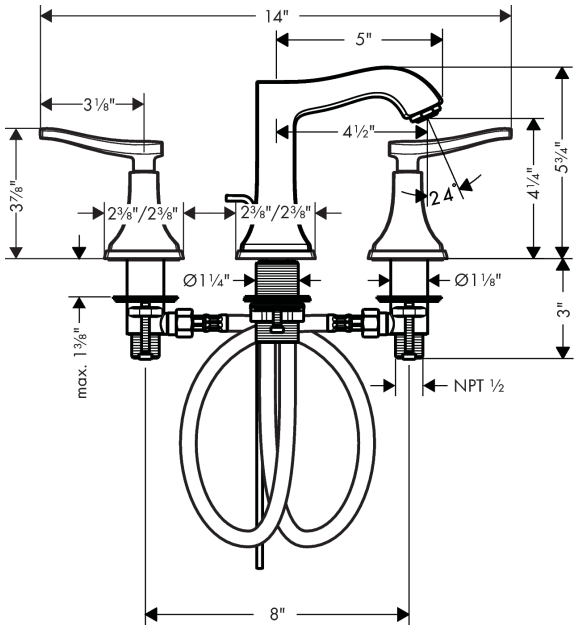
Scale drawing