Collections : D¹ me Diamant / Cannel®/ Losange
& D¹ me ¨ manettes Diamant / Cannel®/ Losange

Bras de douche mural 170 mm, 45°.
Wall mounted shower arm 170mm length, 45°.

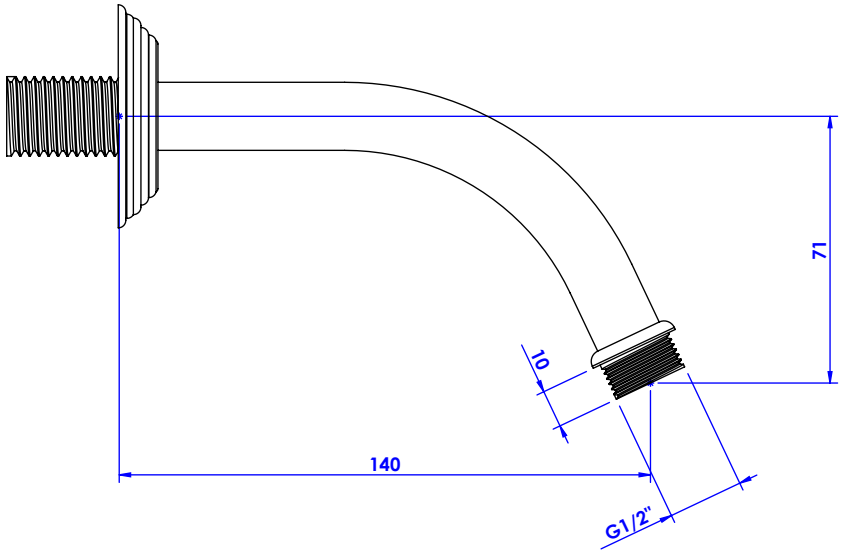

Ref :

D¹ me Diamant
C47-2W170 Cristal blanc / *Clear crystal*
C48-2W170 Cristal bleu / Blue crystal
C49-2W170 Cristal rose / Pink crystal

D¹ me Cannel®
C50-2W170 Cristal blanc / Clear crystal
C51-2W170 Cristal bleu / Blue crystal
C52-2W170 Cristal rose / Pink crystal

D¹ me Losange
C53-2W170 Cristal blanc / Clear crystal
C54-2W170 Cristal bleu / Blue crystal
C55-2W170 Cristal rose / Pink crystal

D¹ me ¨ manettes Diamant (with lever handles)
C56-2W170 Cristal blanc / Clear crystal
C57-2W170 Cristal bleu / Blue crystal
C58-2W170 Cristal rose / Pink crystal

D¹ me ¨ manettes Cannel®(with lever handles)
C59-2W170 Cristal blanc / Clear crystal
C60-2W170 Cristal bleu / Blue crystal
C61-2W170 Cristal rose / Pink crystal

D¹ me ¨ manettes Losange (with lever handles)
C62-2W170 Cristal blanc / Clear crystal
C63-2W170 Cristal bleu / Blue crystal
C64-2W170 Cristal rose / Pink crystal

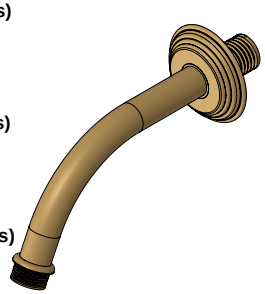

Débit / *Flow rate* : ...l/min (sous 3 bars).
Pression maxi / *max pressure* : 5 bars.

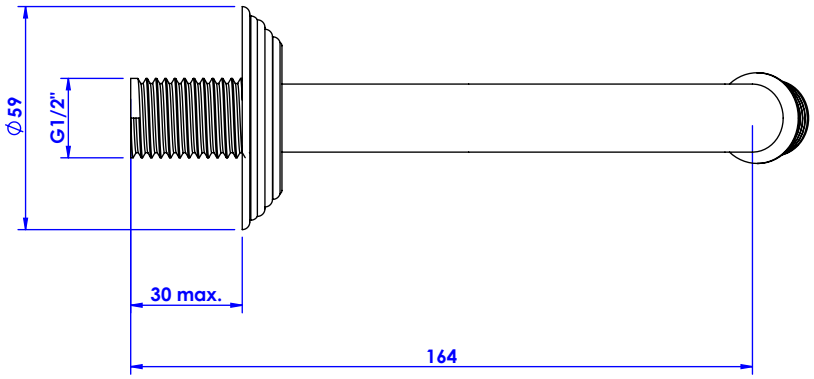

ø de perçage recommandé.
ø recommended drilling.

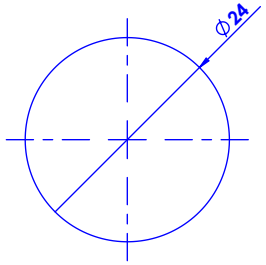

CRISTAL&BRONZE
PARIS · 1937

26/08/2020-1