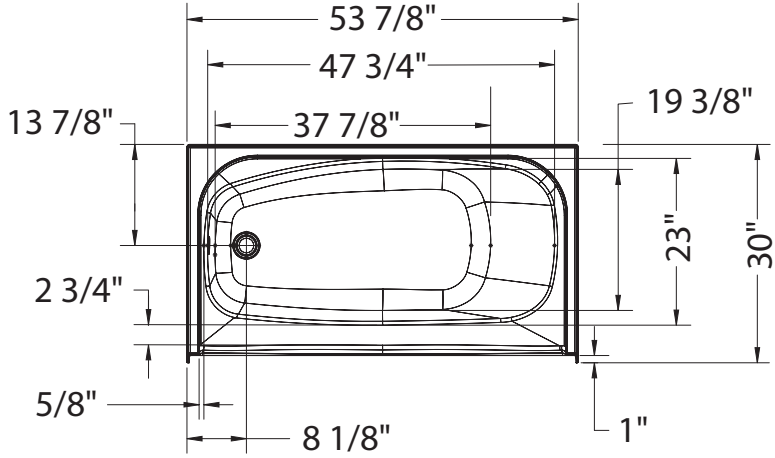

NOT ABOVE-THE-FLOOR

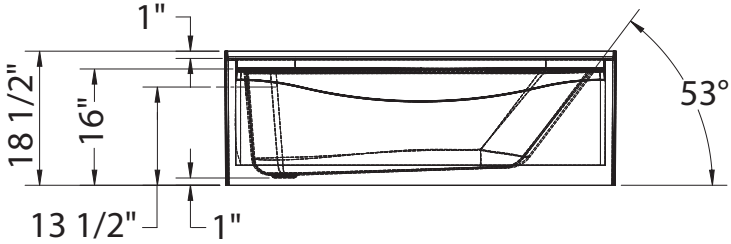

ABOVE-THE-FLOOR

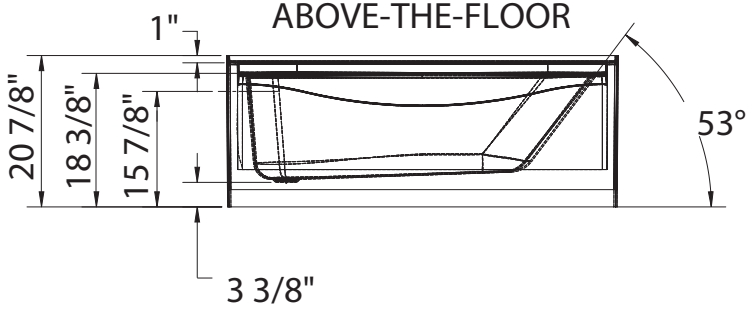

All dimensions are approximate. Structure measurements must be verified against the unit to ensure proper fit.